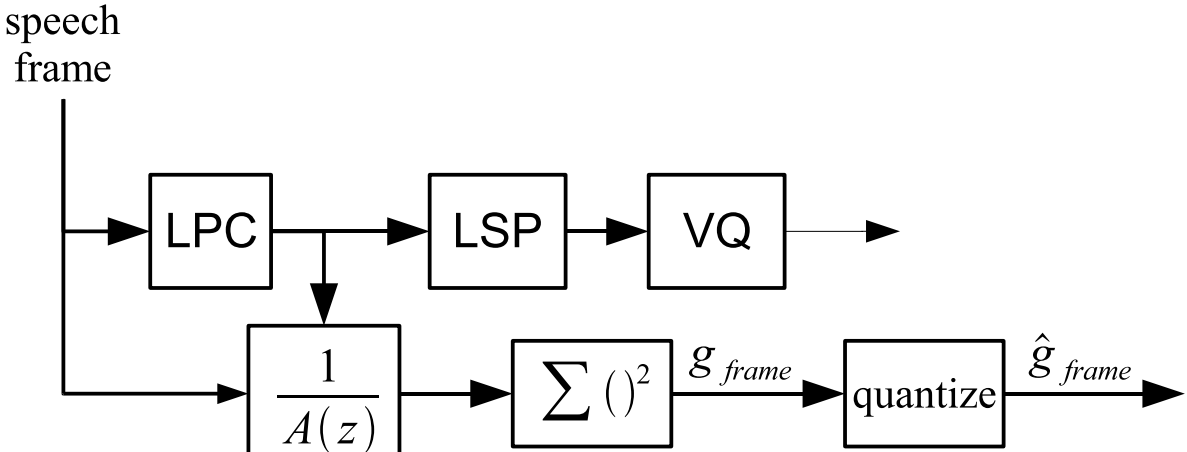
speech
frame
LPC
LSP
VQ
$\frac{1}{A(z)}$
$\sum ()^2$
g_{frame}
quantize
$\hat{g}_{frame}$